IRS－A330ST02－R1						
Pyroelectric infrared sensor			Product specification			
Date Dec.3, 2008	Approved by		Checked by		Prepared by	

1. (Scope)

IRS－A330ST02－R1

This product specification is applied to parallel-quad element type pyroelectric infrared sensor IRS-A330ST02-R1 used to detect infrared rays.
Please contact us when using this product for any other applications than described in the above.

2. (Murata Part Number)

IRS－A330ST02－R1

3. (Outline Drawing and Dimensions)

3-1 Outline Dimensions

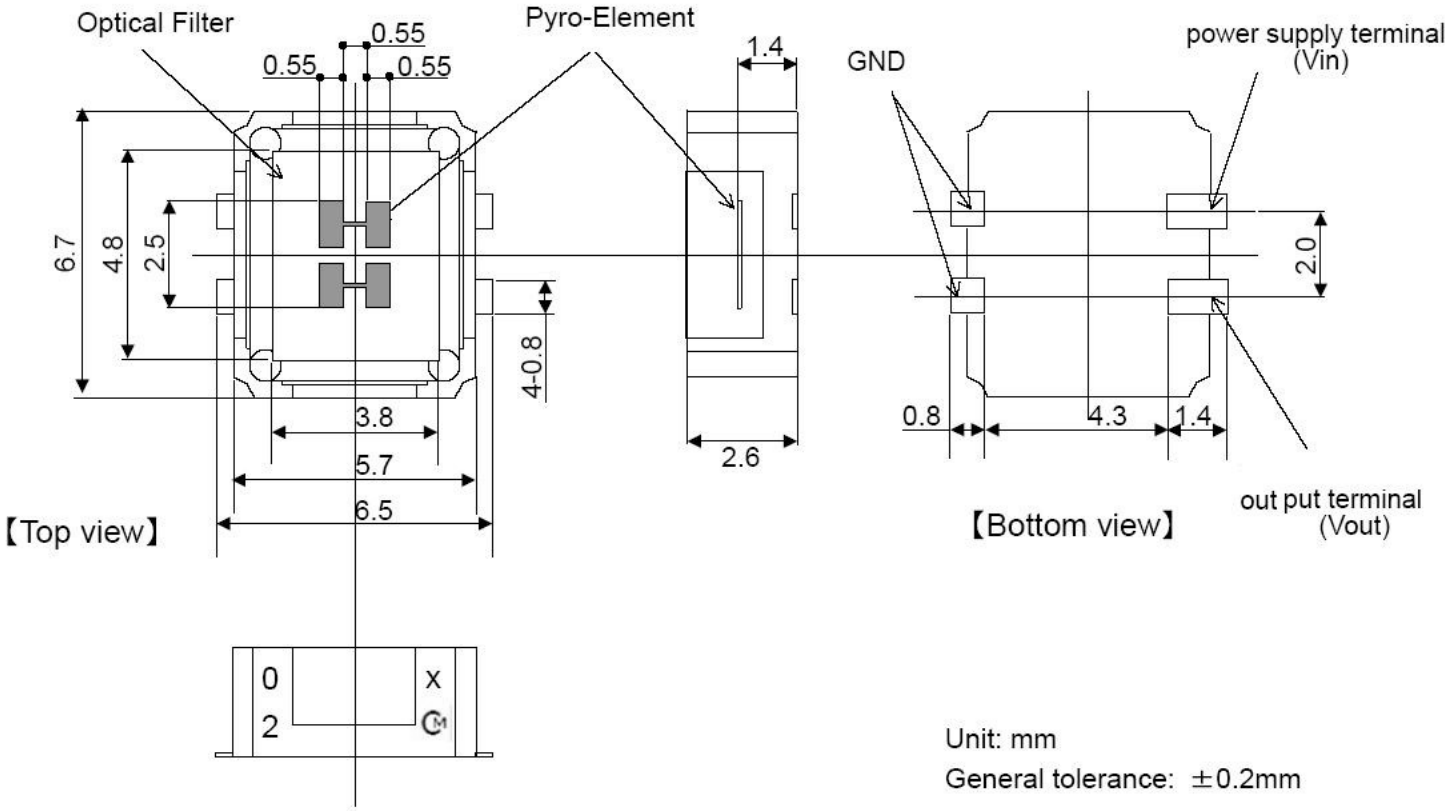

Figure 1. Outline Dimensions

3-2 Equivalent Circuit

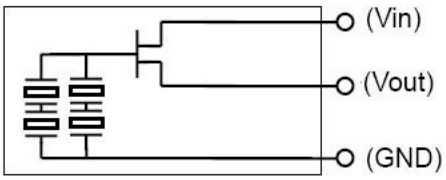

4. (Numbering)

Part number and monthly number are numbering on the side of package.

4-1 Part number code and Trade code

Part number code: 02

Trade code: CM

4-2 Production Month

Printed on the top of sensor in EIAJ code.

(Month) / (Year)		1	2	3	4	5	6	7	8	9	10	11	12
2006	2010	N	P	Q	R	S	T	U	V	W	X	Y	Z
2007	2011	a	b	c̄	d	e	f	g	h	j	k	l	m
2008	2012	n	p	q	r	s	t	u	v	w	x	y	z
2009	2013	A	B	C	D	E	F	G	H	J	K	L	M

4-3 Numbering example (October 2010)

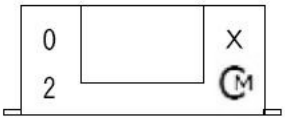

5. Ratings and Characteristics (25°C, 50%RH)

5-1 Responsivity (Rv)

	Min.	Typ.
Responsivity (Rv)	3.0mVpp	3.5mVpp

Responsivity is measured with following system.

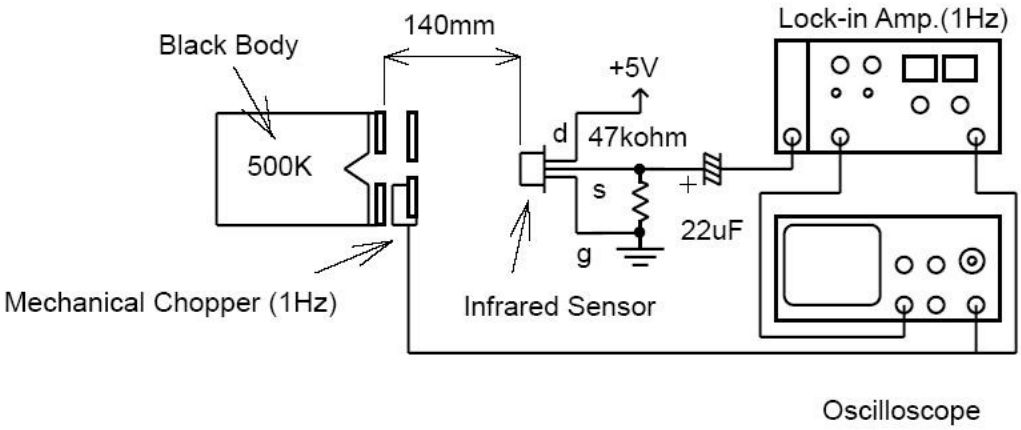

Figure 2. Test system of responsivity

5-2 Balance of Responsivity

Balance	10% Max.

Balance(%) = |(Rr-Rl)/(Rr+Rl)|× 100

Rr : Response from right element

Rl : Response from left element

5-3 White Noise Level

White Noise	300mVpp Max.

Conditions for measurement

· Test circuit : With the circuit shown in figure3.

· Measure Point : Across OUT and GND.

· Environment : In the electrically and optically shielded box kept at 25°C.

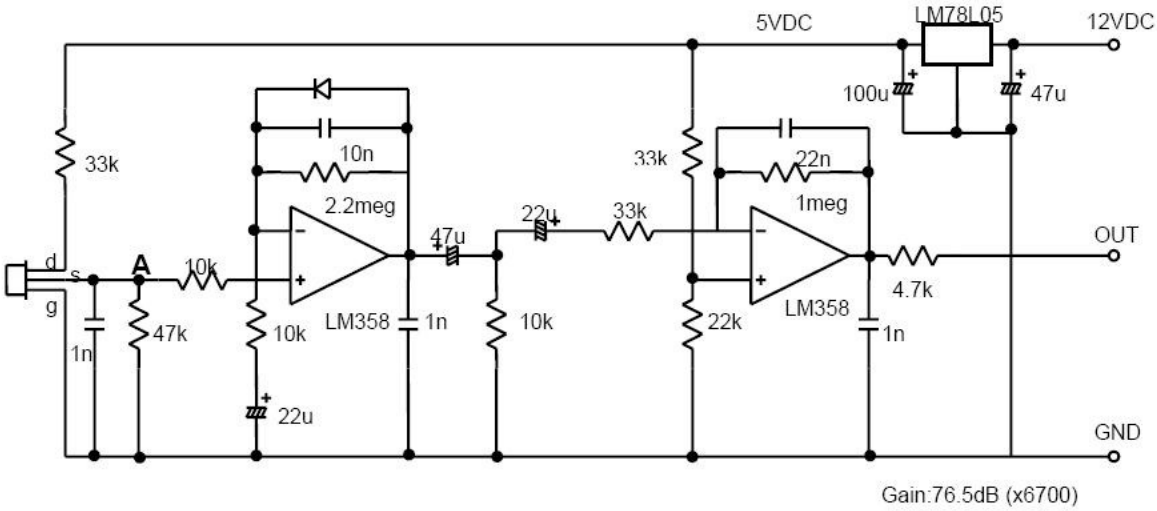

Figure 3. Test circuit

5-4 Source Voltage

Source voltage(Vs)	0.2 to 2.5 V

Conditions for measurement

· Test circuit : With the circuit shown in figure3.

· Measure Point : Across A and GND.

· Environment : In the electrically and optically shielded and temperature controlled box.

5-5 Warm-up Time

Warm-up time	30sec. Max.

Conditions for measurement

· Test circuit : With the circuit shown in figure3.

· Environment : In the electrically and optically shielded box kept at 25°C.
Warm-up time is defined as time for Source Voltage to reach to specified value from turning on.

5-6 Supply Voltage Range

２．０～１５．０ ＶＤＣ

5-7 Recommended Rs Value

４７ｋΩ ≦ Rs ≦ ２００ｋΩ

Resistance Rs is inserted across terminal-S and GND.

5-8 Field of View

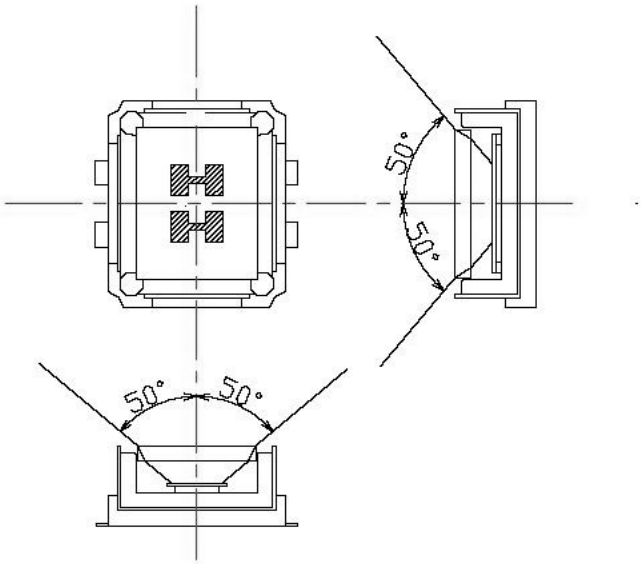

Figure4. Field of View

5-9 Optical Filter

Transmittance : the graph shown in figure5.

Material : Monocrystalline silicon

Thickness : 0.55 ± 0.10mm

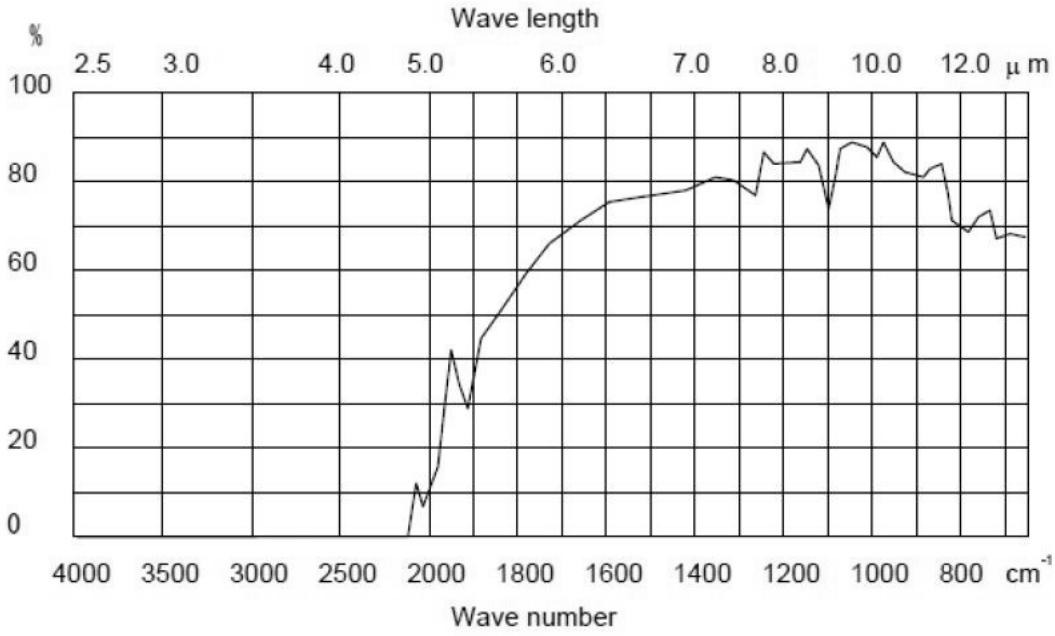

Figure5. Transmittance of optical filter (example)

6. (Operating Temperature)

-40 ~ 70℃

7. (Storage Temperature)

-40 ~ 85℃

8. (Recommended Land Pattern)

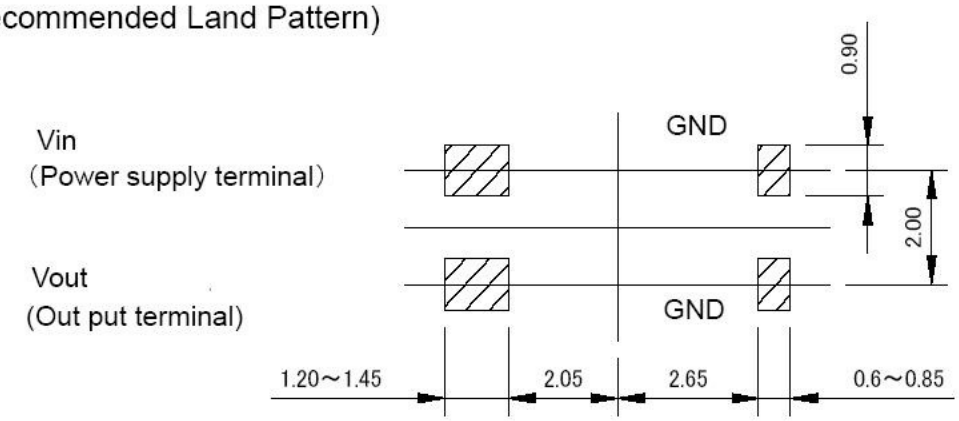

Figure6. Recommendable land pattern

Unit: mm

Tolerance: ±0.05

9. (Soldering Conditions)

· Following figure shows temperature profile when reflow soldering.
· Cleaning after reflow soldering should not be applied.
· Flow soldering should not be applied.
· Reflow cycles: 3 times
· Please contact us when using other reflow profile except following reflow profile.

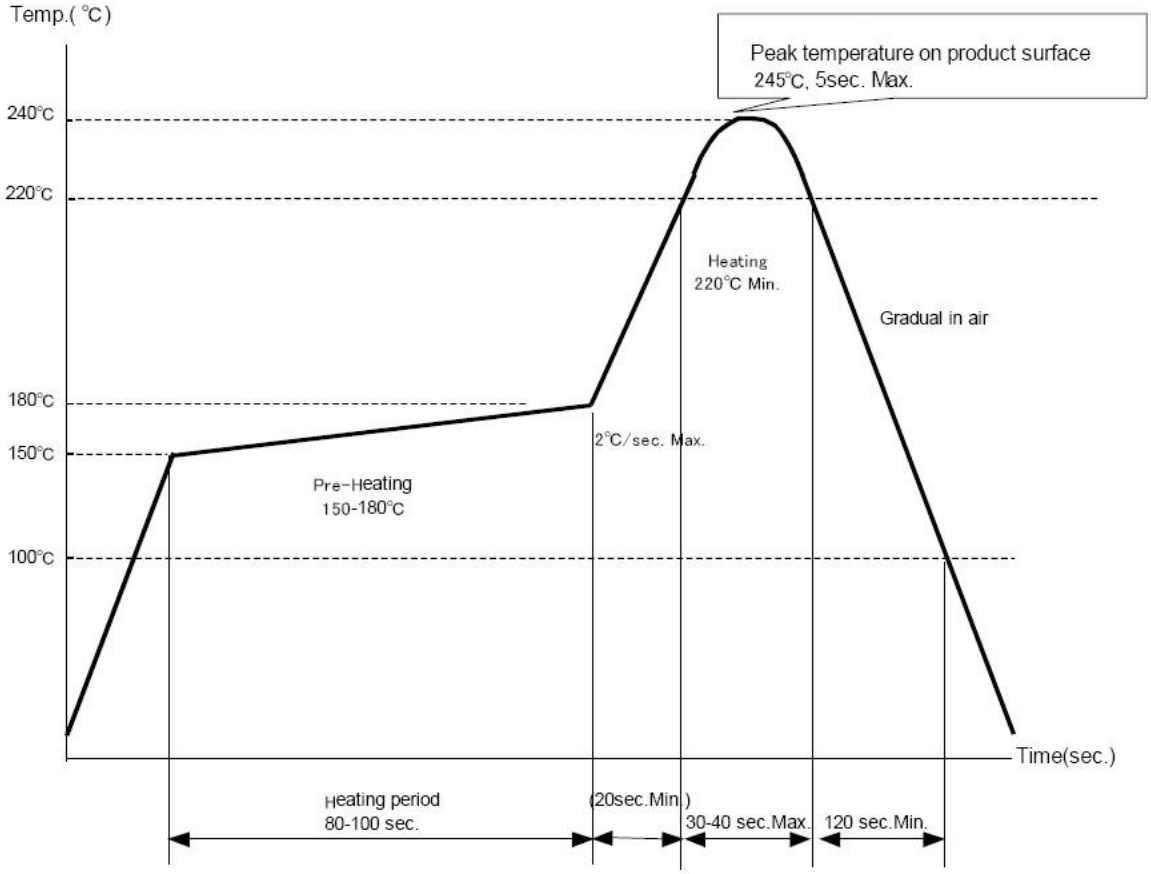

Figure7. Soldering conditions

１０. (Package and Marking)

- The tape for pyroelectric infrared sensor shall be clockwise. The feeding holes shall be to the right side as the tape is pulled toward the user.
- A reel shall contain 1,500 pcs of pyroelectric infrared sensor and its reel label shall be clearly marked with part number, quantity, and inspection number.
- The product which has ROHS-Y<*> mark on the packaging label is compliance with RoHS directives. The alphabet in blank <*> will be changed A to B, B to C, and so on with every revision of the ROHS directives. Please refer to the document, "The Marking for the directives on the restriction of the hazardous substances' use," to check the directives corresponding to alphabets in <*>.

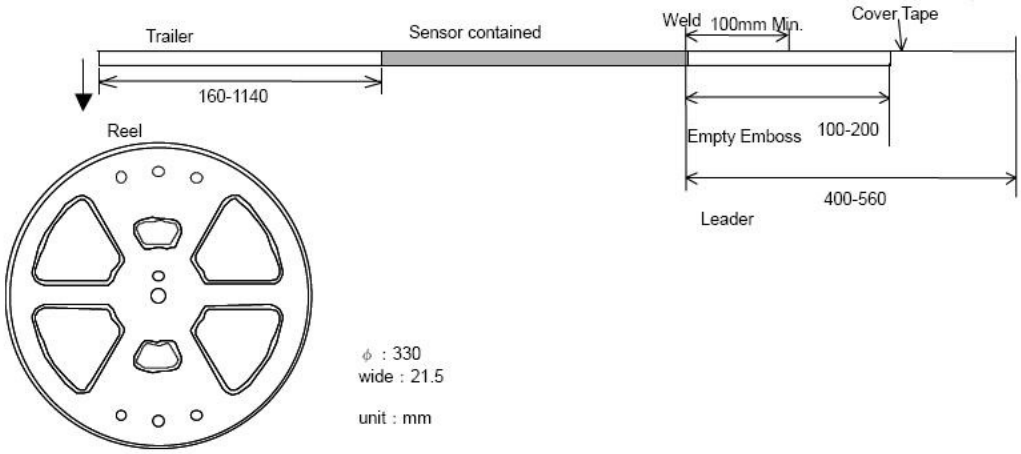

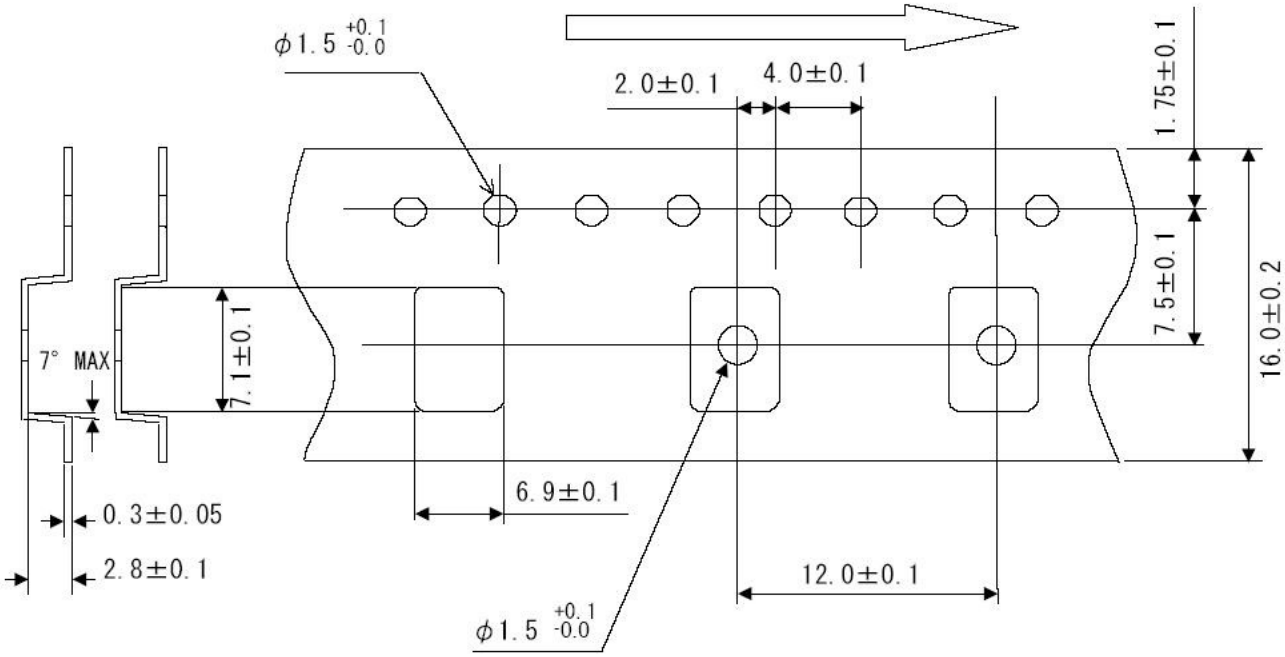

Figure8. Emboss tape

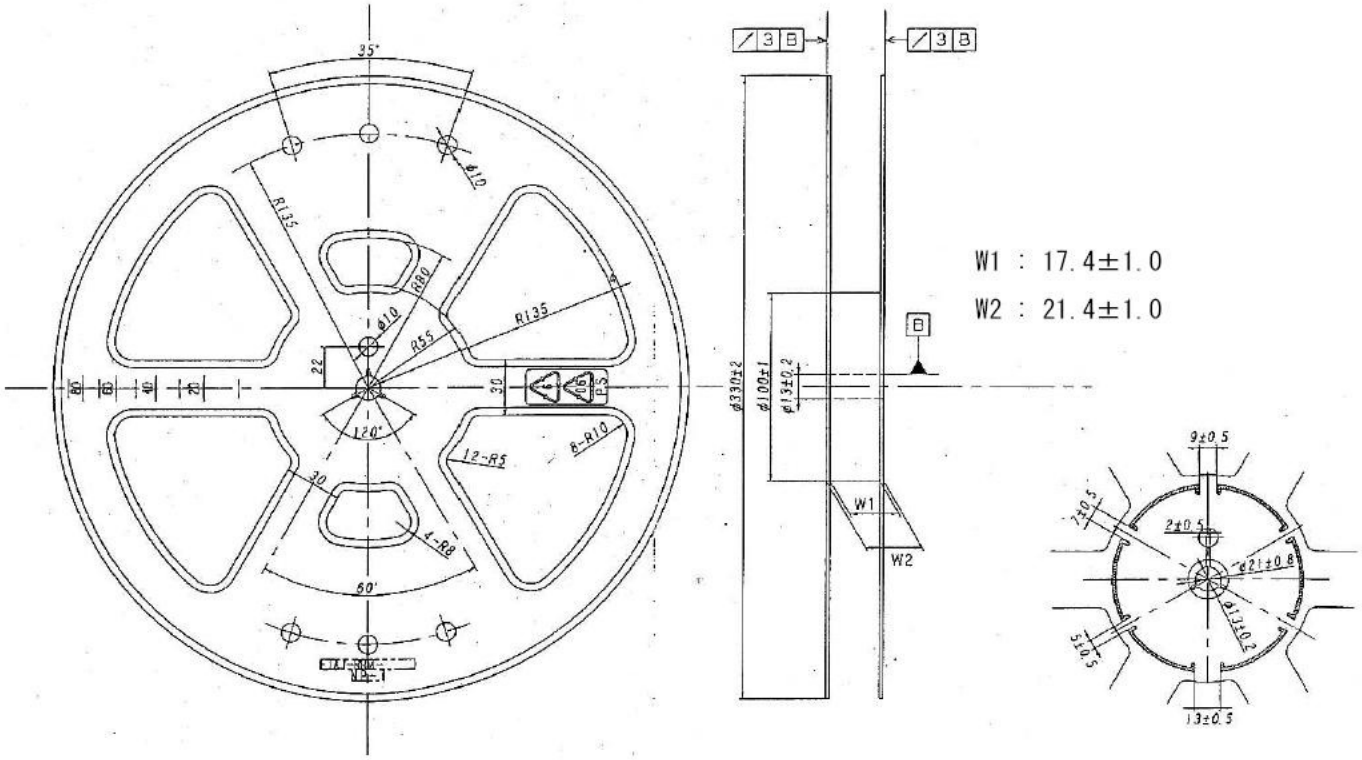

Figure9. Reel Size

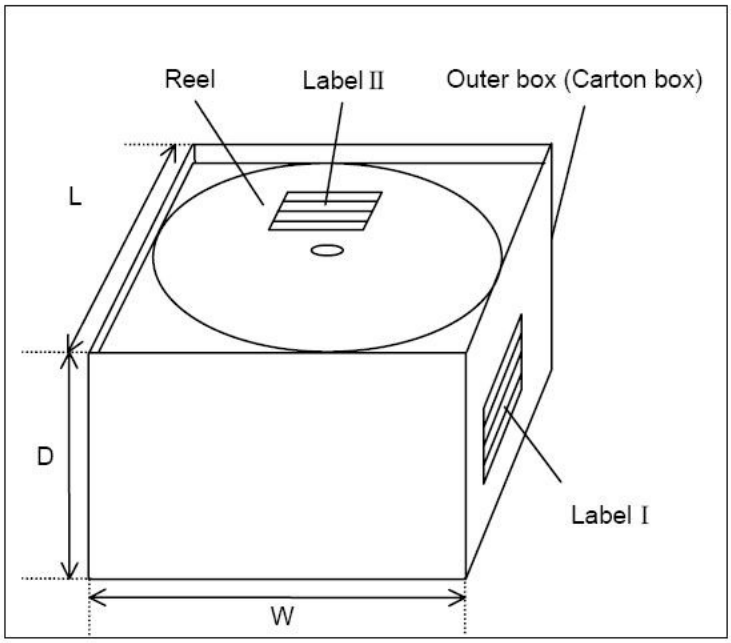

Packaging Quantity & Dimension of Packaging

Packing Quantity	Dimension (mm)		
(pcs.)	L	W	D
1,500 (1 reel)	350	350	120
3,000 (2 reels)			
4,500 (3 reels)			
6,000 (4 reels)			
7,500 (5 reels)			

【Packing Quantity】

7,500 pcs. (=1,500 pcs. × 5)

Big carton box : 7,500 pcs. Max. (=1,500 pcs. × 5 reels)

If there is space in the box, cushion is packed as shock absorber.

※Materials for packing and the packing amount might change the content without a previous notice.

Figure10. Packing

11. Reliability

Judgment criteria for 11-1 to 11-7. After each one of the test, the sensor is kept for three hours at room temperature, then it is evaluated with the following criteria.

Table1. Judgment criteria

Items	Judgment criteria
External appearance	No significant damage
Responsivity	Within ±20% shift from initial value
White noise	within initial value +100mV
Source voltage	within rated value

11-1 High temperature

85°C for 500hours

11-2 Low temperature

-40°C for 500hours

11-3 Humidity

60°C, 95%RH for 500hours

11-4 Heat cycle

20 times of the following cycle

-25°C, 30min.⇒ Room temp. 30min.⇒ 55°C, 30min.⇒ Room temp.

11-5 Vibration

Apply vibration of amplitude of 1.5mm with 10 to 55Hz bands to each of 3 perpendicular directions (x, y, z) for an hour.

11-6 Shock

Apply shock of 100G sinewave by standard shock tester to each 3 perpendicular directions (x, y, z). (1G=9.8m/s^2)

11-7 Soldering heat

2 times of soldering test on figure7.

The second is returned to room temperature after the first soldering test.

12. ⚠Caution

12-1 Limitation of Applications

Please avoid using this product for the applications listed below which require especially high reliability for the prevention of defects that might directly cause damage to the third party's life, body or property.

When this product is used for the applications listed below, we shall not be liable for any claims on the product.

1. Aircraft equipment
2. Aerospace equipment
3. Undersea equipment
4. Power plant control equipment
5. Medical equipment
6. Transportation equipment (vehicles, trains, ships, etc.)
7. Traffic signal equipment
8. Data-processing equipment
9. Application of similar complexity and/or reliability requirement to the applications listed in the above

12-2 Fail-safe

Be sure to provide an appropriate fail-safe function on your product to prevent a second damage that may be caused by the abnormal function or the failure of our product.

13. (Caution in use)

13-1 Notice in design

1) In the case of outdoor use, suitable optical filter and water and humidity proof structure should be applied.

2) To prevent failure or malfunction, Please use a stabilized power supply.

3) Please avoid using the sensor in the following conditions because it may cause failure or malfunction ;

a) In such a fluid as water, alcohol etc. corrosive gas ($S0_2$, Cl_2, NO_X etc.) or sea breeze.

b) In high humidity.

c) In a place exposed directly to sunlight or headlight of automobile.

d) In a place exposed to rapid ambient temperature change.

e) In a place exposed directly to blow from air-conditioner or heater.

f) In a place exposed to strong vibration.

g) In a place exposed to strong electromagnetic field.

h) In such a place where infrared ray is shaded.

i) In any other place similar to the above (a) through (h).

13-2 Notice in handling and storage

1) Optical filter of sensor should not be scratched or soiled.

2) Strong shock should be avoided.

3) Electrostatics and strong electromagnetic field should be avoided.

4) Sensor should be kept on conductive sponge.

5) High temperature, high humidity, fluid as water or alcohol etc., corrosive gas ($S0_2$, Cl_2, NO_X etc.) and sea breeze should be avoided.

6) Use the products within 6 months after receiving.

13-3 Notice in mounting

1) Please follow soldering conditions described in the specification. This product can permanently stop operating if the piezoelectric(pyroelectric) characteristic is decreased due to excessive heating.

2) Cleaning after reflow soldering should not be applied.
Optical filter of sensor should not be soiled because it may cause failure or malfunction.

14. (⚠Note)

1) Please make sure that your product has been evaluated in view of your specifications with our product being mounted to your product.

2) You are requested not to use our product deviating from the agreed specifications.

3) We consider it not to appropriate to include any terms and conditions with regard to the business transaction in the product specifications, drawings or other technical documents. Therefore, if your technical documents as above include such terms and conditions such as warranty clause, product liability clause, or intellectual property infringement liability clause, they will be deemed to be invalid.